Safety assessment of a steel frame using the LRFD and SBRA methods

The computer revolution allows for considering a transition from current prescriptive reliability assessment methods, such as Load and Resistance Factor Design (LRFD) to fully probabilistic concepts, such as Simulation-Based Reliability Assessment (SBRA). The subject of the paper is a comparison and discussion of differences between above mentioned methods using safety assessment of a planar steel frame as an example.

I. Introduction

Advances in computer technology allow for considering transition from structural reliability assessment concepts developed in the pre-computer era to fully probabilistic concepts equivalent to the increasing potential of modern computer technology. Such transition requires reengineering of the entire reliability assessment procedure starting from the new representation of loading to the reliability expressed by comparing the obtained probability of failure Pf and target probability Pd specified in the Codes.

The deterministic approach to the structural reliability assessment (such as the Allowable Stress Design) has been gradually replaced in the last four decades by a semi-probabilistic (or "prescriptive") approach, the Partial Factors Design (see, e.g., the Load and Resistance Factor Design in the U.S., and Eurocodes in Europe). The reliability of structures is now considered to be a function of random variables. The concept of a limit state surface separating a multidimensional domain of random variables into "safe" and "unsafe" domains has been generally accepted and is increasingly used in structural reliability theory, design applications and in the Codes.

Current specifications for structural design, such as AISC, Eurocodes, and ISO, are based on the Partial Factors concept using the "Design Point" approach, reliability index β, and load and resistance factors as the main tools in evaluating reliability. When considering multi-random-variable input resulting from statistical and probabilistic evaluation of data, consistent assessment of reliability based on this concept can become extremely difficult or even impossible. Designers may find the corresponding procedures to be too complicated, difficult to understand and inefficient from their perspective. The reliability check is not explicitly defined or fully explained in the specifications. It may be concluded that the target reliability is set to predefined values and the complete reliability assessment scheme is somewhat hidden in a "black box". The designer's creative work is limited to interpretation of regulations and instructions contained in the codes to meet the predefined reliability.

With modern computer technology, the methods based on sampling and simulations are very efficient. The simulation technique is a convenient and very powerful tool for the analysis of loads, load effect combinations, resistance, safety, durability and serviceability in the case of single- as well as multi-component variables. Taking into account the potential of available personal computers, a pilot reliability assessment scheme has been developer based on the representation of individual variables by bounded histograms and calculating the probability of failure P_f, (see Simulation-Based Reliability Assessment method (SBRA), documented in Ref. 3). In order to make the introduction of the simulation procedure easily accessible to the designer, a direct version of the Monte Carlo technique can be applied.

The subject of the paper is a comparison and discussion of the structural safety assessment procedures/kriteria according to the LRFD AISC Code and according to the probabilistic SBRA method. The selected assignment is common and identical for both approaches discussed, however, substantial differences must be considered in each step of the assessment procedure. Each component of the design criteria and each major step of the design procedure are discussed and compared in a special side by side format. Some of the sections are supplemented with appendices to more closely specify the given problems.

II. Assignment

A planar steel frame shown in Figure 1 is exposed to several vertical and horizontal uncorrelated variable concentrated or uniformly distributed loads (short lasting, long-lasting and dead load). The maximum values of each load are indicated in Table 1. It is assumed that the displacements of all components out of the frame plane are prevented. The effect of residual stresses is implicitly considered in LFRD column curves. The SBRA method shows the effects of residual stresses included in the equivalent geometrical imperfections. In the following Sections 3 to 8 the main components of the safety assessment procedure are specified according to the LRFD and SBRA methods. The left and right columns and the beams are hot rolled profiles IPE 220; the middle column is hot rolled profile IPE 240 (for details see Table 2).

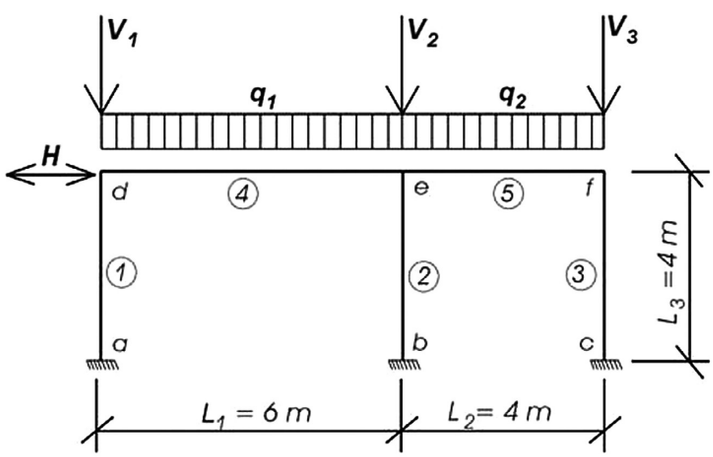

Figure 1 – Scheme of a planar steel frame exposed to mutually uncorrelated variable loads.

Table 1. Loading data			
Loading Symbol	Description	Maximum (Design) Value	
V_1	Dead load (G_{1d})	200 kN	(44.96 k)
	Short lasting load (S_{1d})	150 kN	(33.72 k)
	Long lasting load (L_{1d})	50 kN	(11.24 k)
V_2	Dead load (G_{2d})	200 kN	(44.96 k)
	Short lasting load (S_{2d})	50 kN	(11.24 k)
	Long lasting load (L_{2d})	50 kN	(11.24 k)
V_3	Dead load (G_{3d})	200 kN	(44.96 k)
	Short lasting load (S_{3d})	50 kN	(11.24 k)
	Long lasting load (L_{3d})	50 kN	(11.24 k)
H	Wind load (W_d)	40 kN	(8.99 k)
q_1	Dead load (g_{1d})	5 kN/m	(0.343 klf)
	Short lasting load (s_{1d})	10 kN/m	(0.685 klf)
q_2	Dead load (g_{2d})	10 kN/m	(0.685 klf)
	Short lasting load (s_{2d})	25 kN/m	(1.713 klf)

Table 2. Material and geometrical properties					
Profile	Material & Geometrical Properties			Nominal = Characteristic Values	
IPE 220	f_y,	N/mm^2	(ksi)	235	(34.08)
	E,	N/mm	(ksi)	210 000	(30458)
	A,	m^2	(in^2)	3.337 e-03	(5.172)
	I_y,	m	(in^4)	2.772 e-05	(66.60)
	$W_{el,y}$,	m^3	(m^3)	2.520 e-04	(15.38)
	$W_{pl,y}$,	m^3	(in^3)	2.854 e-04	(17.42)
IPE 240	f_y,	N/mm^2	(ksi)	235	(34.08)
	E,	N/mm	(ksi)	210 000	(30458)
	A,	m^2	(in^2)	3.912 e-03	(6.064)
	I_y,	m	(in^4)	3.892 e-05	(93.51)
	$W_{el,y}$,	m^3	(m^3)	3.243 e-04	(19.77)
	$W_{pl,y}$,	m^3	(in^3)	3.666 e-04	(22.37)

III. Loading and load effects combination

Significant differences between the representation of loads according to LRFD and according to SBRA method can be observed. In the case of LRFD, each load is expressed by its nominal value and by its corresponding load factor. The load effects combinations are determined using set of rules specified in the codes (Ref. 8, 10 and Ref. 13). A completely different representation of loads has been introduced in the SBRA method (Ref. 3). Each load is expressed by a load duration curve (and/or corresponding histogram) and the load effects combinations are calculated using the Monte Carlo sampling technique. Such an approach is equivalent to the potential of the available computer technology (for more details see numerous examples discussed in textbook (Ref. 2) and Appendices 3a and 3b).

3a) LRFD

The nominal values of individual assigned loads listed in Table 1 are obtained by dividing the maxima by the corresponding load factor. The load combination applied later in the assessment of the frame is obtained according to the code (Ref. 8) (for more details see Appendix 3a).

3b) SBRA

Using a generator of pseudo-random numbers, in each Monte Carlo simulation step a new set of loads is created and applied in the multiple repeated analysis of the frame. Load duration curves and corresponding bounded histograms of loads are more closely described in Appendix 3b.

IV. Material properties

For identical material used in any frame design, different aspects of the material are adopted in the evaluation procedure. In LRFD, the yield stress of the selected steel grade is expressed by a discrete "minimum" value, while with the SBRA method the yield stress is represented by a bounded histogram.

4a) LRFD

For available I-shape steel in the US, ASTM A992 and A572 Grade 50 (both with minimum yield stress f_y of 50 ksi) are commonly specified. However, for demonstration purposes, the steel with nominal yeld stress of 34 ksi (235 N/mm^2) is used in this study.

4b) SBRA

A bounded histogram of steel grade S235 (station according to the system European standards; characteristic value of yield stress f_{yk} = 235 N/mm^2) is used in the study (see Figure 2). The histogram was obtained using a statistical analysis of test results (for more details see Ref. 3)

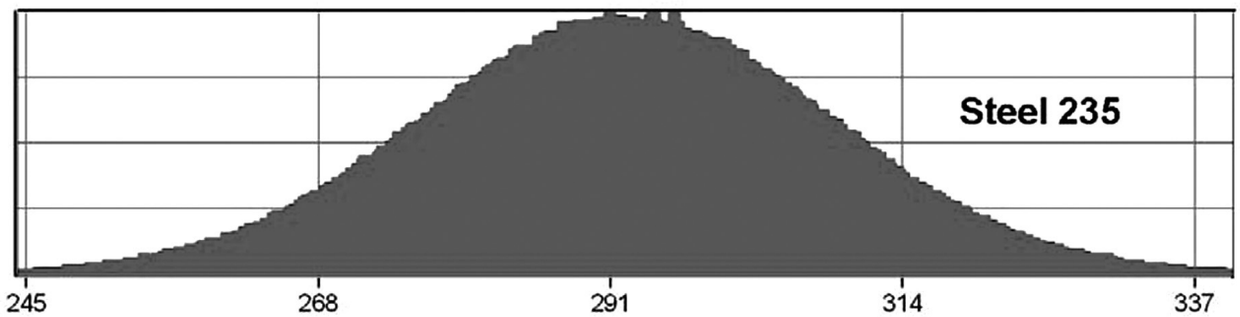

Figure 2 – Bounded histogram of yield stress of steel grade S235

V. Local and global imperfections

In the safety assessment of a steel frame it is required to consider local and global geometrical imperfections. According to LRFD the effect of imperfections is included in the assessment formulas and adjustment of column curves, while with the SBRA method the individual imperfections are expressed by variables related to the shape of individual members of the frame and by variables defining the imperfections of the global geometry of the frame.

5a) LRFD

The global imperfections can be expressed by deterministic values of the out-of-vertical position of columns. In LRFD, the second order P-δ and P-Δ effect are accounted for by amplification the B_1 and B_2 factors in member maximum moment calculations (Please see LRFD specification or Appendix 5a for detailed explanations.)

5b) SBRA

The SBRA method has adopted from European standards an idea of equivalent geometrical local and global imperfections. EGI are not actual construction tolerances but, because they are intended to represent the effect of a number of factors, are likely to be larger than such tolerances. Details regarding the variable local and global imperfections are explained in Appendix 5b.

VI. Resistance and reference values

The frame analysis must correspond to the "rules of the game" of safety assessment. In LRFD, the resistance is combined with different resistance factors (R), which are associated with different failure mechanisms. The majority of failure mechanisms is based on the design yield stress of the applied steel grade and on the formation of the plastic mechanism. For bending steel compact sections, which are fully braced against lateral torsional buckling, the resistance factors times the internal forces corresponding to the formation of the fully plastic mechanism define the resistance applied in the safety check criterion. In the SBRA method the reference value can be expressed by the onset of yielding the steel frame, or on a tolerable total or permanent plastic deformation. The frame analysis must follow these rules of the game.

6a) LRFD

In LRFD, the resistances for beam and column members are nominal axial capacity and nominal bending capacity with a corresponding reduction factor ϕ of 0.85 and 0.9. In other words, only 85 % and 90 % of the nominal axial and bending capacity are utilized during frame design (Please refer to Appendix 6a for detail description of pertinent nominal resistance.)

6b) SBRA

In the SBRA method, the resistance for beam and column members is derived from the histogram of yield stress. With regard to the actual scatter of Šeld stress, the elastic bending capacity can be higher in many simulation steps than the full plastic capacity corresponding to the design value of yield stress f_{yd} (characteristic value f_{yk} divided by safety factor γ).

(For details see Appendix 6b.)

VII. Frame analysis

Two totally different involvements to the frame analysis are applied in the LRFD and in the SBRA method. In LRFD just a single set of input data is considered in the analysis of the frame. With SBRA the analysis is repeated many times (e.g.,10^7 times), while in each simulation step the pseudo-random number generator is used for random sampling of all input variables (loads, imperfections, material and geometrical properties and other), i.e., the frame is recalculated many times and the response of the structure (expressed e.g., by stresses or strains) is stored and made ready for the final calculation of the probability of failure.

7a) LRFD

Figure 3 shows the frame loaded by the set of loads obtained following the code (Ref. 8). The resistence and demand of the structure are calculated using the controlling load combination. According to LRFD, a first order analysis of both sway and non-sway cases is required.

7b) SBRA

Using the SBRA method, the "strength stability concept" is applied. The analysis is carried out according to the 2nd order theory including $P\text{-}\delta$ and $P\text{-}\Delta$ effects. No individual stability check of columns is necessary; resistance is related to the onset of yielding or tolerable plastic deformations.

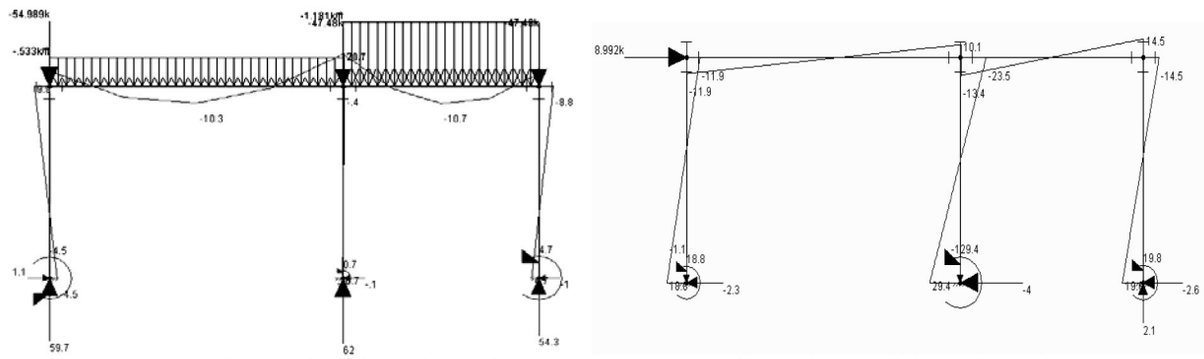

(a) Analysis without lateral translation *(b) Analysis with lateral translation*

Figure 3 – LRFD First-order analysis results without and with lateral translation

VIII. Safety assessment

In the LRFD method, demand D divided by capacity C must be less than 1.0, i.e., $D/C < 1.0$, where D expresses the combination of the assigned load effects. Considering the SBRA method and reference value defined by the onset of yielding, the calculated probability of failure P_f is compared with the target probability P_d contained in the codes (Ref. 12), or required by the investor or determined by the authorities having jurisdiction.

8a) LRFD

Following LRFD design procedure, members are considered adequate when demands are less than the capacity, i.e., D/C 1.0. With D/C closer to 1, more economical is the design in terms of member size. Please refer to Table 3 for a summary of the D/C ratio for different frame members and Appendix 8a for details on Demand/Capacity Calculations.

8b) SBRA

Taking into account the SBRA safety criterion, the calculated probability of failure P_f must be less than the target probability P_d introduced in the solid example by the value $P_d = 7*10^{-5}$ recommended by the Code (Ref. 12). The calculated P_f (corresponding to the 2nd order analysis) are illustrated using so-called" probability of failure curves" (for details see Figure 4 and Appendix 8b).

Table 3. Demand/Capacity ratio Summary for LRFD Design

	Member	Demand/Capacity Check
Two–Bay Frame	Column 1	1.081
	Column 2	0.913
	Column 3	1.041

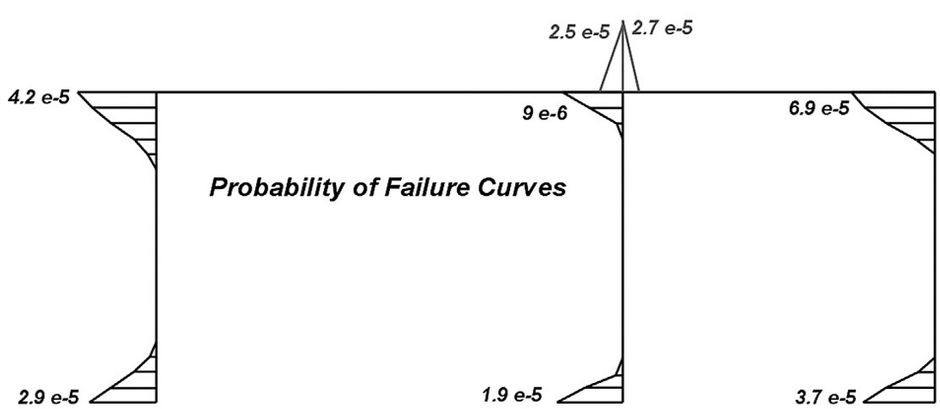

Figure 4 – The probability of failure curves

IX. Summary and conclusions

The focus of this study is a pilot confrontation of two structural reliability assessment methods, the prescriptive partial factors method given in contemporary US standards, i.e., LRFD, and the probabilistic SBRA method, using a steel frame safety assessment as a case in point. The focus has been on the qualitative differences between the two approaches. It is not a simple matter to compare the prescriptive design procedures given in LRFD with the probabilistic SBRA approach. Wide-ranging "rules of the game" are valid, i.e., a completely different representation of loads and analysis of the load effects combination, the definition of reference values, the introduction of local and global imperfections and the substance of reliability criteria.

In the LRFD approach, the demand/capacity ratio of each structural element is checked individually to ensure the adequacy of the whole structural system. Second-order effects including member imperfection and P-Delta effects are either implicitly or explicitly included in the member demand/capacity check. The LRFD approach is an improvement over the Allowable Stress Design (ASD) by introducing different load and resistance factors to produce a more rational and economic design. Either ASD or LRFD has been the foundation for steel building design in the U.S. Both approaches are based on demand/capacity check of the individual member. It is very accurate for a simple element and component; however, it may be tedious and may produce uneconomic design for a complicated structural system. In order to produce an economic and time saving design even for a complicated structural system, with the continuing progress and innovation of computer technology, different types of advanced analysis become feasible such as "second-order refined plastic hinge analysis" (Ref. 11, 6 and 1) or alternatively the probabilistic SBRA method (Ref. 3).

In the SBRA method all input variables including actions are expressed by bounded histograms (Ref. 2). By using the Monte Carlo technique, each simulation step generates a new combination of random variables (considering variable actions and their combination), imperfections, material properties and others. This procedure is applicable for linear as well as for nonlinear structural analysis. In this way, the reliability check of a frame structure is significantly simplified. The stability problems are solved using the "strength and second order theory stability approach," without determining buckling lengths and buckling factors. Safety is related to exceeding elastic capacity or to the tolerable total or plastic deformations. The main limitation of the probabilistic SBRA approach is the potential of hard- and software. The dramatic improvements of computer technology, including parallel processing, is very encouraging and promising – if not exciting.

Failure probability vs. target probability is a good way to quantify a design. Both LRFD and SBRA design procedures yield safe frame designs. The LRFD approach produces a design that meets predefined failure reliability; while the SBRA approach discloses the failure reliability explicitly. With this additional information, designers can more easily adapt new complex approaches (such as the Performance Based Design in the future), which are, in fact, the current trends for future codes.

Appendix 3a: LRFD load combinations

The appropriate critical load combination shall be used to determine the required strength of the structure and its elements. Please note that listing combinations are currently governing California's design – the 1997 Uniform Building Code (from 1993 LRFD). The load factors are slightly different in the current 2005 LRFD.

(1) $1.4D$

(2) $1.2D + 1.6L + 0.5(L_r \text{ or } S \text{ or } R)$

(3) $1.2D + 1.6(L_r \text{ or } S \text{ or } R) + (0.5L \text{ or } 0.8W)$

(4) $1.2D + 1.3W + 0.5L + 0.5(L_r \text{ or } S \text{ or } R)$

(5) $1.2D \pm 1.0E + 0.5L + 0.2S$

(6) $0.9D \pm (1.3W \text{ or } 1.0E)$,

where
D = dead load (the weight of the structural elements and permanent features on the structure)
L = live load (occupancy and moveable equipment)
L_r = roof live load
W = wind load
S = snow load
E = earthquake load (Depending on the applicable code.)
R' = rainwater or ice load

Appendix 3b: SBRA method and loadings

In structural design, loading is one of the most significant variables affecting reliability. Practically all types of loads are randomly variable quantities represented by corresponding probability density function. Considering some selected loadings (e.g,. long lasting load, snow load), the probability density function corresponding to these loads do not correspond to any parametrical distribution. This problem is in the SBRA method very easily cleared by the introduction of so-called "load duration curves" and corresponding bounded histograms (the load duration curves correspond to the sorted load time history). The load duration curves can be derived on the basis of measured load data or an engineer's estimate. Procedures for self-made load duration curves and bounded histograms, including a histogram database of common types of loads, can be found in a book (Ref. 2). Some examples of load durativ curves and corresponding bounded histograms of selected loads (e.g., dead load, long lasting load, wind load, snow load) are shown on the Figure 5. (The illustrated histograms were taken from the database of the book (Ref. 2).

In modeling loads using "load-duration curves", it is important to understand the dependence between different loads and load types. The SBRA method makes it possible to consider various conditional relations between individual loads (independent loads, loads depending on the existence of others, loads that cannot occur on a structure at the same time, mutually correlated loads, two- and more-componrnt loads, etc.). In frame analysis proposed in this study are considered the loads as mutually independent.

One of the most important problems affecting the reliability analysis of frame structures according to the 2nd order theory is the combination of loads and all other random variables (mechanical and geometrical properties, imperfections and others). It is well known that the principles of superposition and proportionality are not valid considering the nonlinear analysis. The combinations of load effects corresponding to the particular load cases cannot be used to find the most critical response of the structure. It is necessary to carry out the combinations of all random variables (not only of particular actions) already on the level of input data and the analysis must be separately done for all considered combinations. Such an analysis fully corresponds to the principles of the SBRA method where in each simulation step a new set of random variables is generated. Such new generated set of random variable enters the transformation model (for details see Ref. 3). The result of the simulation process is a set of searched load effects (stresses in cross-sections, bending moments and internal forces, deformations) corresponding to individual combinations of input variables. Such obtained results may be used for the probabilistic analysis and following reliability evaluation of the structure and its components.

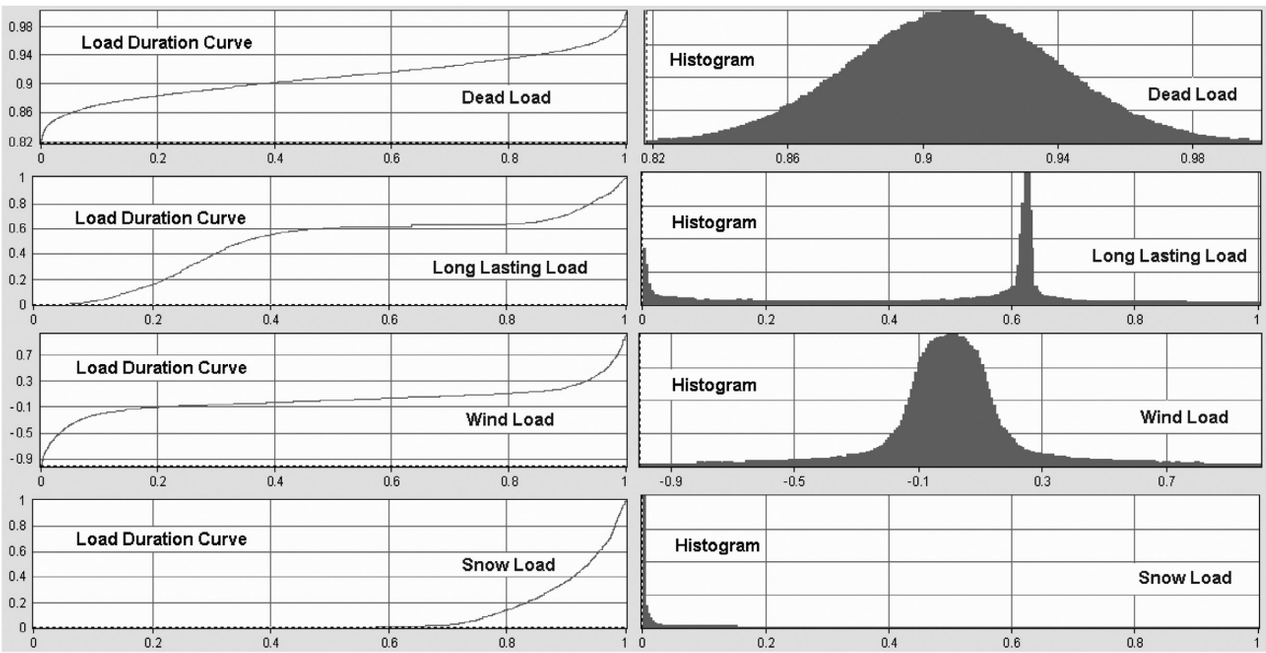

Figure 5 – Load duration curves and corresponding histograms (dead load, long lasting load, wind load, snow load)

Appendix 5a: LRFD second-order effects

In LRFD design, the second-order effects: "member imperfection" and "P-Delta effects" are included as follows.

Member Imperfection:

In the LRFD design, column curves were established by closely fitting SSRC (Structural Stability Research Council) curve 2. They implicitly account for the second-order effects, residual stresses, and an initial out-ofstraightness of 1/1500. The column strength curves for the design strength P_n of columns are presented in chapter E of the LRFD specification (Ref. 8).

$$P_n = A_g F_y \left(\frac{0.877}{\lambda_c^2} \right) \; for \; \lambda_c > 1.5$$

$$P_n = A_g F_y (0.658^{\lambda_c^2}) \; for \; \lambda_c \leq 1.5$$

where

A_g = gross area of member,
F_y = specified yield stress,
λ_c = slenderness parameter, which is expressed as

$$\lambda_c = \frac{KL}{\pi \cdot r} \sqrt{\frac{F_y}{E}},$$

where

K = effective length factor,
L = length of member,
R = radius of gyration,
E = modulus of elasticity,
KL/r should be taken as the larger of the effective slenderness ratios for strong-and weak-axis buckling.

P-Delta Effect:

In LRFD, the second order P-δ and P-Δ effect are accounted for by amplification B_1 and B_2 factor in member maximum moment calculation. Member maximum moment M_u can be decided by the following approximate second-order analysis procedure according to LRFD (in chapter C).

$$M_u = B_1 M_{nt} + B_2 M_{lt}$$

where

M_{nt} = required flexural strength in member assuming there is no lateral translation (NT) of the frame,
M_{lt} = required flexural strength in member as a result of lateral translation (LT) of the frame only,
B_1 = P-δ moment amplification factor, which can be expressed as:

$$B_1 = \frac{C_m}{1 - \frac{P_u}{P_{el}}}$$

where

C_m = equivalent moment factor, generally expressed as:

$$C_m = 0.6 - 0.4\frac{M_1}{M_2}$$

where

M_1/M_2 is the ratio of the smaller to larger end moment in a non-sway case,
P_u = required axial compressive strength for the member under consideration, summation of axial forces in both sway and non-sway cases,
P_{e1} = $\pi^2 EI/(KL)^2$, where K is an effective length factor in the plane of bending based on the assumption that side-sway is prevented,
B_2 = P-Δ moment amplification factor, which can be expressed as:

$$B_2 = \frac{1}{1 - \sum P_u \left[\frac{\Delta_{oh}}{\sum HL}\right]}$$

or

$$B_2 = \frac{1}{1 - \frac{\sum P_u}{\sum P_{e2}}}$$

where

ΣP_u = required axial strength of all columns in a story,
Δ_{oh} = lateral inter-story deflection,
ΣH = summation of all story horizontal forces producing Δ_{oh},
L = story height,
ΣP_{e2} = $\Sigma\,[\pi^2 EI/(KL)^2]$, where K is an effective length factor not including the leaning column effect in the plane of bending, assuming that side-sway is free.

Appendix 5b: SBRA method and imperfections

The probabilistic analysis of steel frames does not enter only the combinations of particular actions but the combinations of all random variables, i.e. including imperfections, cross-sectional characteristics, yield stress and others. The current standards (Ref. 8, 13), give formulas only for combining particular actions. If we want to use a "strength stability concept" (i.e. the assessment according to the 2nd order theory including F-Δ and F-δ effects; without determining buckling lengths and buckling factors), it is necessary to consider the structure with all global as well as local imperfections. It does not suffice to combine only particular actions, but what must also be taken into account is the combinations of randomly variable imperfections, cross-sectional characteristics and other randomly variable quantities. This approach can be carried out very easily and transparently using the probabilistic SBRA method.

A suitable introduction of global frame imperfections (in form of initial sway imperfections ϕ) and local bar imperfections (in form of initial bow imperfections eo of bars) as random variables is therefore one of the basic conditions for allowing the proper stability analysis of frame structures using the SBRA method and 2nd theory approach (including F-Δ and F-δ effects). The SBRA method applies (using bounded histograms) with any distribution of particular imperfections corresponding to measured or estimated values. Possible distributions of imperfection histograms (normal distribution, asymmetric distribution, two-peak distribution, discrete values distribution) are shown on Figure 6. It is suitable to "cut" these distributions on boundary values to avoid some unreal values of imperfections. The frame analysis given in this paper considers normal distributions of imperfections. As boundary values are considered the equivalent geometrical imperfections of frame ϕ_{max} and of particular bars $e_{o,max}$ are calculated according to the standard (Ref. 14)

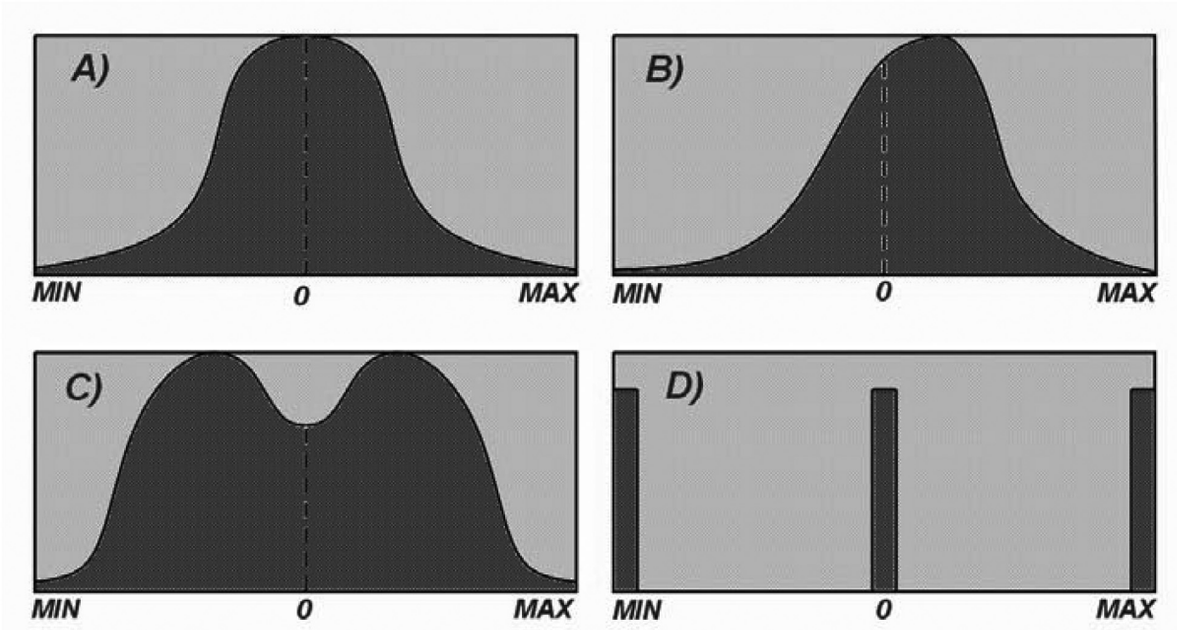

Figure 6 – Possible imperfection histograms:
a) normal distribution, b) asymmetric distribution, c) two-peak distribution, d) discrete values distribution

Appendix 6a: LRFD resistance factors

In LRFD, the resistance factors ϕ for the different types of structural members are as follows:
ϕ_c = 0.85 (resistance factor for compression)
ϕ_b = 0.90 (resistance factor for flexure)
ϕ_t = 0.90 (resistance factor for tensile yielding)
ϕ_t = 0.75 (resistance factor for tensile rupture)
ϕ_{sf} = 0.75 (resistance factor for shear rupture)
ϕ_v = 0.90 (resistance factor for shear)

Please note the listing resistance factors ϕ are based on the 1993 LRFD for the 1997 Uniform Building Code, which governs California's current design. There is a slight difference in both load and resistance factor in the 2005 LRFD. This is expected because in LRFD, the load factor and resistance factor are calibrated against each other for failure probability.

Appendix 6b: SBRA method and reference values

The resistance of frame structure and its elements is derived from the yield stress of steel fy considering the strength stability concept used together with the SBRA method. The results of long-standing research and measurement of yield stress of bar profiles IPE, UPE, T and L made by L. Rozlívka and M. Fajkus (Ref. 2) can be used for the probabilistic assessment according the SBRA method. Figure 2 illustrates the design histograms of yield stress of Czech steel S235 designed by the forenamed authors. It is noteworthy, that the characteristic value of the yield stress design histogram of steel S235 equals f_{yk} = 266 MPa. It is worth noting that there is an expressive difference between the expected characteristic value 235 MPa and the actual value 266 MPa (obtained using statistical analysis of test results, whereas about 9000 specimens were tested).

An appropriate introduction of the reference value is one of the most important problems affecting the safety assessment of frame structures. The onset of yielding is very often considered as the reference value; the safety is so related to the exceeding of elastic resistance R_{el}. The tolerable elasto-plastic deformations (deflections of beams, rotations of joints) can be also complemented as appropriate reference values. The exceeding of such deformations may limit the proper function of the frame and thereby the structure is not reliable (for instance some structural elements must be reconstructed or replaced). An increased work difficulty of elasto-plastic analysis prevents more extensive utilization of elasto-plastic reference values $R_{el,pl}$. The utilization of full plastic resistance of the structure and its components R_{pl} is not suitable for probabilistic reliability assessment for the above-mentioned reasons concerning tolerable plastic deformations (except some accidental design situations like fire or earthquake).

The presented example of frame analysis using the SBRA method was complemented only by the elastic resistance R_{el} as the reference value. But it is necessary to realize that the elastic bending carrying capacity (corresponding to the actual scatter of yield stress) can in many simulation steps be higher than the full plastic capacity corresponding to the design value of yield stress f_{yd} (characteristic value f_{yk} divided by safety factor γ).

Appendix 8a: LRFD demand/capacity calculations

The procedure for LRFD demand/capacity checks of different structural members is the same. Therefore, the calculations for column #1, column #2, and column #3 are presented as ## \ ## \ ## for solutions of the same equation. "N.A." is "Not Applicable".

Given:

$A_g = 5.172 \backslash 6.064 \backslash 5.172\ in^2$

$I_{y,\ col} = 66.598 \backslash 93.506 \backslash 66.598\ in^4$

$S_y = 15.38 \backslash 19.77 \backslash 15.38\ in^3$

$L_{col} = 13.123 \backslash 13.123 \backslash 13.123\ ft$

$F_y = 34 \backslash 34 \backslash 34\ ksi$

$E = 30458 \backslash 30458 \backslash 30458\ ksi$

$I_{y,\ beam1} = 66.598\ in^4$

$I_{y,\ beam2} = 66.598\ in^4$

$L_{beam1} = 19.685\ ft$

$L_{beam2} = 13.123\ ft$

From Analysis:

$P_u = 60.9 \backslash 63.1 \backslash 56.7\ kip$ (lateral translation + no lateral translation)

$M_{nt} = 9.9 \backslash 0.7 \backslash 8.80\ k{-}ft$ (no lateral translation of the frame)

$M_1 = -4.5 \backslash -0.5 \backslash -4.7\ k{-}ft$ (smaller of end Moment when no lateral translation)

$M_2 = 9.9 \backslash 0.7 \backslash 8.80\ k{-}ft$ (larger of end Moment when no lateral translation)

$M_{lt} = 18.8 \backslash 29.4 \backslash 19.8\ k{-}ft$ (with lateral translation of the frame)

Calculation – Axial Load:

$r = Sqrt\ (I_{y,col} / A) = 3.588 \backslash 3.927 \backslash 3.588$ in

$G_{TOP} = \Sigma(I_c / L_c) / \Sigma(I_b / L_b) = 1.50 \backslash 0.84 \backslash 1.00$

$G_{BOTTOM} = 0 \backslash 0 \backslash 0$

$K\ (from\ Non{-}Sway\ Chart) = 0.64 \backslash 0.615 \backslash 0.62$

$Non{-}Sway\ \lambda_c = (KL)/(r\pi) * Sqrt\ (F_y / E) = 0.299 \backslash 0.262 \backslash 0.289$

$K\ (from\ Sway\ Chart) = 1.24 \backslash 1.14 \backslash 1.16$

$Sway\ \lambda_c = (KL) / (r\pi) * Sqrt\ (F_y / E) = 0.579 \backslash 0.486 \backslash 0.541$

$F_{cr} = (0.877 / \lambda_{c2})F_y$, if $\lambda_c > 1.5$, otherwise $(0.658\lambda_{c2})F_y = 29.55 \backslash 30.80 \backslash 30.07\ ksi\ (from\ Sway\ \lambda_c)$

$\phi_c P_n = 0.85 F_{cr} A_g = 129.92 \backslash 158.74 \backslash 132.21\ kip\ (from\ Sway\ \lambda_c)$

$P_u / \phi_c P_n = 0.469 \backslash 0.398 \backslash 0.429\ (from\ Sway\ \lambda)$

Calculation – Moment:

$P_{e1} = A_g F_y / \lambda_c^2 = 1970.9 \backslash 2996.8 \backslash 2110.1\ kip\ (from\ Non{-}Sway\ \lambda_c)$

$C_m = 0.6{-}0.4(M_1 / M_2) = 0.782 \backslash 0.886 \backslash 0.814$

$End\ Condition = Restrained$

$Minimum\ C_m = 0.85 \backslash 0.85 \backslash 0.85\ (when\ ends\ restrained\ 0.85)$

$Minimum\ C_m = 1.0 \backslash 1.0 \backslash 1.0\ (when\ not\ restrained\ 1.0)$

$B_1 = C_m / (1{-}P_u / P_{e1}) = 1.000 \backslash 1.000 \backslash 1.000\ (greater\ than\ 1)$

$P_{e2} = A_g F_y / \lambda_{c2} = 525.0 \backslash 872.2 \backslash 600.0\ kip\ (from\ Sway\ \lambda_c)$

$\Sigma P_u = 180.7 \backslash 180.7 \backslash 180.7\ kip\ (Summation\ of\ Col\ \#1, \#2, \#3)$

$\Sigma P_{e2} = 1997.2 \backslash 1997.2 \backslash 1997.2\ kip\ (Summation\ of\ Col\ \#1, \#2, \#3)$

$B_2 = 1 / (1{-}\Sigma P_u / \Sigma P_{e2}) = 1.099 \backslash 1.099 \backslash 1.099$

$M_u = B_1 M_{nt} + B_2 M_{lt} = 30.6 \backslash 33.0 \backslash 30.6\ k{-}ft$

Assume Compact Section and No Lateral Torisonal Buckling

$Plastic\ Section\ Modulus = 1.13\ Elastic\ Section\ Modulus$

$Z_y = 1.13Sy = 17.42 \backslash 22.35 \backslash 17.42\ in^3$

$\phi_b M_n = 0.9M_p = 0.9Z_y F_y = 533 \backslash 684 \backslash 533\ k{-}in = 44.4 \backslash 57.0 \backslash 44.4\ k{-}ft$

Interaction (Demand/Capacity):

If $P_u / \phi_c P_n < 0.2$, $P_u / (2\phi_c P_n) + M_u/\phi_b M_n$,

otherwise, $P_u / (\phi_c P_n) + (8 / 9)(M_u / \phi_b M_n) =$ ***1.081 \ 0.913 \ 1.041 (NG \ OK \ NG)***

Appendix 8b: SBRA method and safety criterion

The safety assessment using the SBRA method is expressed by comparing the calculated probability of failure P_f (using the Monte Carlo simulation technique) with the target probability P_d given, for instance, in the Czech code (Ref. 12). The value of probability of failure P_f determines the probability that the resistance of the structure or thein elements (expressed by introduced reference value RV) will be exceeded by the calculated load effect LE. This relation is written formally by the expression

$$P[(RV - LE) < 0] = P_f < P_d$$

Considering the reference value (RV), defined in the solved example by the onset of yielding, i.e. the probability of failure of individual bars equals the probability of exceeding the yield stress in the most loaded fibers of the investigated cross section of the bar (disregarding the effect of residual stresses), the safety condition is expressed by the formula

$$P_f = P[(f_y - \sigma) < 0] < P_d$$

where Pd is the target probability for safety assessment and σ is the maximum value of stress in the most loaded fibers of checked cross-section. Assuming an elastic response of the structure to the loading, the maximum stress σ in the outer fibers of the section can be determined by the equation

$$\sigma = abs\left(\frac{M}{W}\right) + abs\left(\frac{N}{A}\right)$$

where M (kNm) and N (kN) are the values of internal forces at the checked section, while W (m^3) and A (m^2) are the cross-sectional geometrical properties. Note: Values M and N are different if a transformation model based either on the first order or on the second order theory is applied.

To enable a visual control of performed structural analysis, the scatter of resulting internal forces, bending moments and maximum normal stresses (in absolute values) can be illustrated using a set of dots, so called "anthills" and "ants", corresponding to the random combinations of input variables (see Figure 7). The results shown in Figure 7 were obtained using the MCD 1.0 program (Ref. 7).

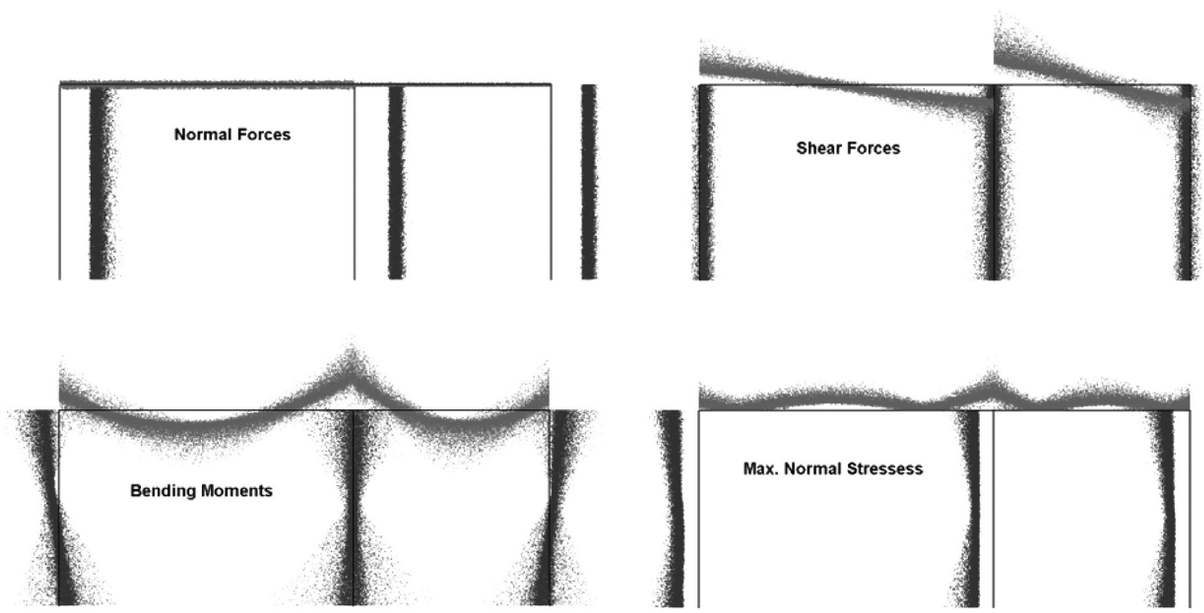

Figure. 7 – The scatter of normal forces, shear forces, bending moments and maximum normal stresses

By analyzing the frame structure with help of the Monte Carlo simulation, the probability of failure in any particular cross section can be ascertained. The calculation of the probability of failure P_f, referring to individual cross sections, leads to a plot of so-called "probability of failure curves" (see Figure 4). In this figure, the P_f curves refer to the second order theory. These curves indicate the cross-sections controlling the safety, e.g., regarding the investigated frame, the sections at the ends of columns and beams. The P_f curves may be very easy and effectively used to compare and evaluate different design alternatives (Refs. 5 and 4).

Prof., PhD., Pavel Marek DrSc.,
pmarek2@noise.cz,
F.ASCE, ITAM Academy of Sciences of Czech Republic

Assistant Professor Vít Křivý, PhD.,
Dept. of Civil Eng.,
VŠB TU, Ostrava, Czech Republic

Consulting Engineer, I-Hong Chen PhD.,
Consulting Eng., Fremont, CA 94539, U.S.A.

Převzato z ASCE (American Society of Civil Engineering)

Acknowledgements

Support for this project has been provided by the Grant Agency of the Czech Republic (Project No. 103/04/1451 and Project No. 103/05/H036), by ITAM, Academy of Sciences of the Czech Republic and by VŠB Technical University, Ostrava, Czech Republic.

Dr. I-Hong Chen and both co-authors would like to express deepest gratitude to Professor Wai-Fah Chen, Dean, University of Hawaii. Without Professor Wai-Fah Chen, this international cooperation would not have happened.

References

Periodicals

[1] Liew, J. Y. R., White, D. W., and Chen, W. F. (1993): Second-order refined plastic hinge analysis for frame design: Part I, J. Struct. Engrg., ASCE, 119 (11).

Books

[2] Marek, P., Brozzetti, J., Guštar, M. und Tikalsky, P. (2003): Probabilistic Assessment of Structures using Monte Carlo Method. Basics, Exercises, Software, 2nd Ed, ÚTAM AV ČR, Prag, Tschechische Republik, ISBN 80-86246-19-1.

[3] Marek, P., Guštar, M., und Anagnos, T. (1996): Simulation-Based Reliability Assessment for Structural Engineers, CRC Press, Boca Raton, FL, ISBN 0-8493-8286-6.

Proceedings

[4] Křivý, V., Marek, P. (2006): Probabilistic reliability assessment of a steel frame applying the SBRA Method, Proceedings of 3rd ASRANet Colloquium 2006, ASRANet Ltd, Glasgow, United Kingdom, ISBN: 0-9553550-0-1.

[5] Pustka, D., Křivý, V., Václavek, L., Marek, P. (2006): Selected Structural Stability Problems Using SBRA Method, Proceedings of IABSE Symposium 2006 – Responding to Tomorrow's Challenges in Structural Engineering, Budapest, Hungary, ISBN: 3-85748-114-5.

Reports, Theses and Individual Papers

[6] Kim, S. E., and Chen, W. F. (1996): Practical advanced analysis for braced steel frame design, J. Struct. Eng., ASCE 122(11).

Computer Software

[7] Křivý, V. (2005): Computer Programme MCD 1.0, VŠB-TU Ostrava, Ostrava, Czech Republic.

Standards & Codes

[8] AISC (1993): Load and Resistance Factor Design Specification, American Institute of Steel Construction, 2nd ed., Chicago.

[9] AISC (2005): Steel Construction Manual, American Institute of Steel Construction, 13th ed., Chicago.

[10] ASCE (2002): Minimum Design Loads for Buildings and Other Structures, ASCE Standard, Revision of ASCE 7-98

American Society of Civil Engineers, Reston, VA.

[11] Chen I. H. and Chen W. F. (1999): Practical Advanced Analysis for Seismic Frame Design, Advances in Structural

Engineering-An International Journal, A Multi-Science Publication, Essex, UK, Vol. 2 (4).

[12] ČSN 731401 (1998): Design of steel structures, Appendix A, (in Czech), ČNI, Prague, Czech Republic.

[13] Eurocode – EN 1990 (2002): Basis of structural design, CEN, Brussels.

[14] Eurocode 3 – EN1993-1-8 (2005): Design of steel structures. Part 1.1: General rules and rules for buildings, CEN, Brussels.

[15] Uniform Building Code (1997) Whittier, CA: International Conference of Building Officials.

Nomenclature

A = area
Ag = gross area of member
B = amplification factor
C = capacity
D = demand
D = dead load (the weight of the structural elements and permanent features on the structure)
δ = deflection
Δ = lateral deflection
$e_{o,max}$ = geometrical equivalent imperfection of bars
E = earthquake load (depending on the applicable code)
ϕ = reduction factor
f_y = yield stress
F_y = specified yield stress
γ = safety factor
L = live load (occupancy and moveable equipment)
L_r = roof live load
λ_c = slenderness parameter, which is expressed as
M = bending moment
N = axial force
P_f = probability of failure
P_d = target probability
R' = rainwater or ice load
S = snow load
σ = stress
W = wind load
K = effective length factor
L = length of member
R = radius of gyration
E = modulus of elasticity
M_{nt} = required flexural strength in member assuming there is no lateral translation (LT) of the frame
M_{lt} = required flexural strength in member as a result of lateral translation (LT) of the frame only
B_1 = P-δ moment amplification factor, which can be expressed as:
C_m = equivalent moment factor
M_1/M_2 = is the ratio of the smaller to larger end moment in a non-sway case
P_u = required axial compressive strength for the member under consideration, summation of axial forces in both sway and non-sway cases
ΣP_u = required axial strength of all columns in a story
Δ_{oh} = lateral inter-story deflection
ΣH = summation of all story horizontal forces producing Δ_{oh}
L = story height
ΣP_{e2} = $\Sigma\,[\pi^2 EI/(KL)^2]$, where K is an effective length factor not including the leaning column effect in the plane of bending, assuming that side-sway is free.

Vyhodnocení bezpečnosti ocelové výstuže pomocí metod LRFD a SBRA
Počítačová revoluce dovoluje uvažovat o přechodu od současných „předpisových" metod posuzování spolehlivosti (jako je metoda dílčích součinitelů označovaná v U.S.A. „Load and Resistence Factor Design) k plně pravděpodobnostním koncepcím, jako je metoda SBRA (Simulation Based Reliability Assessment). Předmětem příspěvku je zdůraznění a diskuse rozdílů mezi výše uvedenými metodami při posudku bezpečnosti rovinného ocelového rámu.